amt postpro®



postpro SF UNBOXING GUIDE

JANUARY 2022 // V2.0

CONFIDENTIAL

CONTENTS

1	**RISKS AND SAFETY WARNINGS**	**4**
2	**MACHINE OVERVIEW**	**5**
	2.1 MACHINE DIMENSIONS	5
	2.2 POSTPRO SF MACHINE DIMENSIONS AND WEIGHT	5
	2.3 PACKAGED DIMENSIONS AND WEIGHT	5
3	**SHIPMENT AND DELIVERY**	**6**
	3.1 SHIPPING CRATE	6
	3.2 UNLOADING THE CRATE	6
	3.3 SAFETY MEASURES FOR UNLOADING	6
4	**ANCILLARY EQUIPMENT UNBOXING**	**7**
	4.1 BOFA EQUIPMENT	7
	4.2 FINISHING AND RECOVERY AGENTS	7
5	**POSTPRO SF UNBOXING**	**7**
	5.1 PERSONAL PROTECTION EQUIPMENT (PPE)	7
	5.2 TOOLS REQUIRED FOR UNBOXING	8
	5.3 UNBOXING PROCEDURE	8
6	**CONTACT INFORMATION**	**13**

CONFIDENTIAL

DOCUMENT IS CONFIDENTIAL

Data supplied in this document shall not be duplicated, used or disclosed in whole, or in part, for any purpose other than evaluation. The contents will not be passed in any form verbal, paper or electronic to any other company or individual without the express permission of Additive Manufacturing Technologies Limited.



1 // RISKS AND SAFETY WARNINGS

⚠DANGER Danger indicates an imminently hazardous situation, which, if not avoided, will result in death or serious injury.

⚠WARNING Warning indicates a potentially hazardous situation, which, if not avoided, could result in death or serious injury.

⚠CAUTION Caution indicates a potentially hazardous situation, which, if not avoided, may result in minor or moderate injury.

⚠DANGER **Chemical Hazard: FA326** may cause severe skin burns and permanent eye damage, including blindness. The chemical may also cause organ damage with prolonged exposure. Pregnant and breastfeeding women should not enter the processing room or operate PostPro SF. The client must have an eye wash station and emergency shower available when using this consumable and follow the general lab safety precautions. The consumables may also cause an allergic skin reaction. Do not breathe the mist or vapour.

⚠CAUTION **Chemical Hazard:** Avoid touching parts that have been partially or recently processed, even when wearing nitrile gloves. Ensure that all PostPro SF process steps are concluded to the manufacturer's instructions before touching any processed parts with bare hands.

⚠CAUTION **Chemical Hazard:** If an operator gets chemicals in their eye, immediately flush it out with water using the safety eye wash. Consult the MSDS for more information about treating eye exposure.

⚠CAUTION **Chemical Hazard:** If an operator gets chemicals on their skin, immediately rinse with water. Consult the MSDS for more information about treating skin exposure.

⚠CAUTION **Chemical Hazard:** If a processed part is sticky, even after full processing, something may have gone wrong with the processing steps or the part maybe partially processed. Do not handle the part with bare hands and avoid any inhalation of fumes by using an appropriate mask with filter.

⚠DANGER **Chemical Hazard:** Always keep the PostPro SF machine closed when not processing to ensure no fumes are inhaled by operators. Keep waste containers closed all the time

⚠CAUTION **Pinch Hazard:** The lid of the processing chamber is heavy. Close the lid carefully using the handles on the PostPro SF to avoid pinching fingers or hands.

⚠CAUTION **Electrical Hazard:** Do not open any door in the body of the device as there is an electric shock risk. The doors are for service entry only by AMT Support team only.

⚠WARNING **Chemical warning:** Do not place processed parts in the mouth or give processed parts to children or to animals.

⚠DANGER **Tipping Hazard:** Always use at least two people to move PostPro SF. Unlock the castor heels at the base of the machine before attempting to move the machine. Lock the wheels once PostPro SF is in its new position.

2 // MACHINE OVERVIEW

2.1 // MACHINE DIMENSIONS

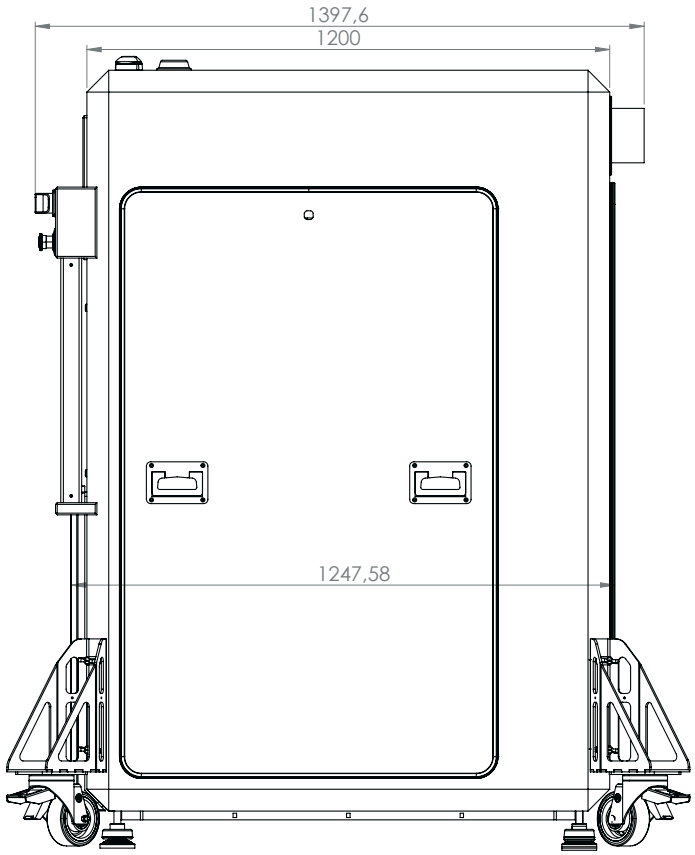

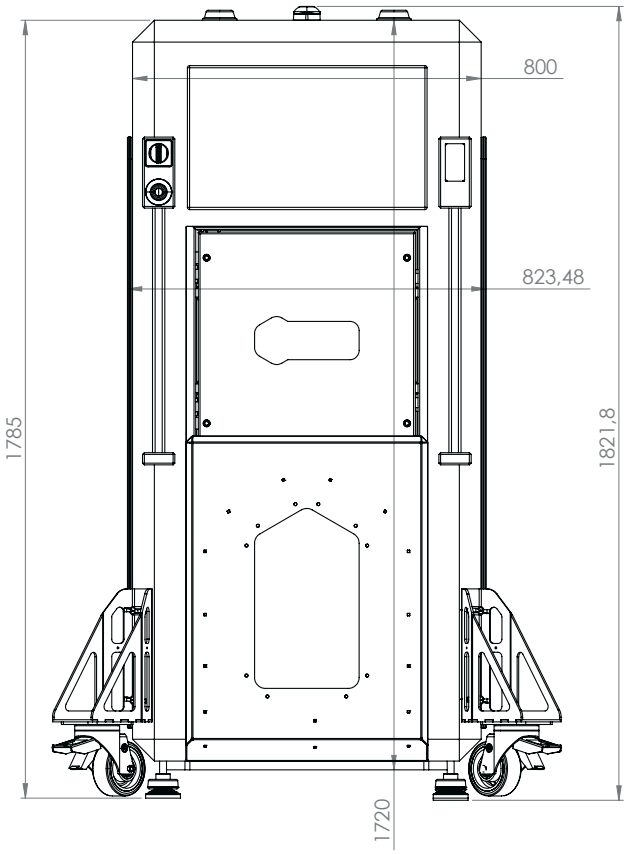

2.2 // POSTPRO SF MACHINE DIMENSIONS AND WEIGHT

PostPRO SF50	mm / Kg	In / lbs
Width	824 mm	32.5 in
Depth	1,398 mm	55.5 in
Height	1,822 mm	72 in
Weight	800 Kg	1.765 lbs

PostPRO SF100	mm / Kg	In / lbs
Width	824 mm	32.5 in
Depth	1,398 mm	55.5 in
Height	1,822 mm	72 in
Weight	850 Kg	1.875 lbs

2.3 // PACKAGED DIMENSIONS AND WEIGHT

PostPRO SF50	mm / Kg	In / lbs
Width	1,082 mm	42.5 in
Depth	1,587 mm	62.4 in
Height	2,027 mm	79.8 in
Weight	900 Kg	1985 lbs

PostPRO SF100	mm / Kg	In / lbs
Width	1,082 mm	42.5 in
Depth	1,587 mm	62.4 in
Height	2,027 mm	79.8 in
Weight	950 Kg	2095 lbs

CONFIDENTIAL

3 // SHIPMENT AND DELIVERY

AMT will help arrange shipment and customs clearance to the client's facility. The client is responsible for transporting the crates from point of delivery to the installation site based on the following shipment information.

3.1 // SHIPPING CRATE

- The PostPro SF machine and ancillaries will arrive packed in a crate, with the extractor and cannisters arriving separately.
- The PostPro SF machine crate will have the dimensions and weights as per Table 2.3.
- Once the PostPro SF machine and accessories has been unloaded, the client will need to store the crates on-site in the unlikely event that the machine needs to be returned to AMT.

3.2 // UNLOADING THE CRATE

- Client will need to provide equipment for unloading palletized crates from the delivery vehicle, typically a forklift truck and driver.
- Client will need to provide equipment to move the crate to the installation site, typically a forklift truck and driver and or machinery skates or pallet truck.
- Unloading can occur at, or near the installation site if there is sufficient clearance for the PostPro SF machine.
- The crates should be inspected for damage and the shipping tilt/impact indicators should be reviewed. If any damage has occurred during transit, then this should be noted and logged with the shipping company at the point of receipt.

3.3 // SAFETY MEASURES FOR UNLOADING

Unloading procedures must be performed by trained personnel in accordance with occupational health and safety measures enforced at the install country or state, which may include but not limited to:

- Clear of other traffic, pedestrians and people not involved in loading or unloading.
- Clear of overhead electric cables so there is no chance touching them, or of electricity jumping to 'earth' through machinery, loads or people.
- Safety equipment must be considered. Mechanical equipment and heavy moving loads are dangerous.
- Guards or skirting plates may be necessary if there is a risk of anything being caught in machinery (for example dock levellers or vehicle tail lifts). There may be other mechanical dangers and safety procedures to be considered.
- Ensure the vehicle or trailer has its brakes applied and all stabilisers are used. The vehicle should be as stable as possible.
- Always check the floor or deck of the loading area before loading to make sure it is safe. Look out for debris, broken boarding, etc.

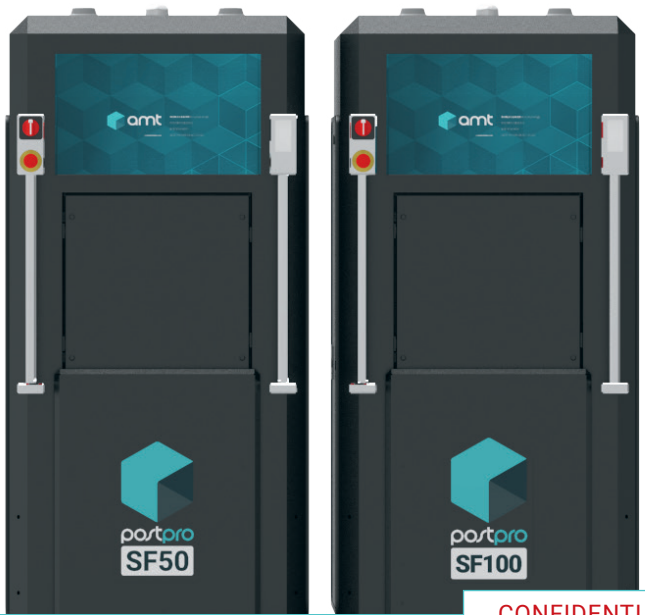

CONFIDENTIAL

4 // ANCILLARY EQUIPMENT UNBOXING

4.1 // BOFA EQUIPMENT

The BOFA extractor will be shipped on a separate pallet with the SF machine crate.
Prior to the installation it is only necessary to configure the electrical power connections for each machine. Please do not connect the extraction hoses, this will be completed during the installation process.

All ancillaries are supplied in the machine box.

4.2 // FINISHING AND RECOVERY AGENTS

Finishing and recovery agents will be delivered separately from all other shipments. It is not necessary to do anything with this. Prior to the installation, AMT will contact you to confirm all items have been delivered.

5 // POSTPRO SF UNBOXING

The unboxing should take place as close as possible to the final location of the machine. Prior to unboxing check the ShockWatches located on box have not been triggered. In the event of a ShockWatch showing signs of mis-handling contact AMT immediately. Ensure that the there is suitable space to safely unbox the PostPro SF.

Two people are required to unbox the PostPro SF.

The required unboxing area for the machine is around 4.0m x 6.0m.

5.1 // PERSONAL PROTECTION EQUIPMENT (PPE)

The following PPE should be worn when unboxing the crate:

- Safety shoes with protected toes
- Safety helmet
- Safety glasses
- Safety gloves

It is the responsibility of the customer to ensure the PPE being worn is compliant with the company, local and national safety regulations.

5.2 // TOOLS REQUIRED FOR UNBOXING

The following tools are necessary for unboxing the PostPro SF.

- Drill
- Pozidriv Screwdriver Drill Bit
- Spirit Level
- Torque Head for Drill (T-40)
- Cutters / Cable Snips
- Forklift
- Steps
- 17mm Open Wrench

It is the responsibility of the customer to ensure the PPE being worn is compliant with the company, local and national safety regulations.

5.3 // UNBOXING PROCEDURE

Please follow the below procedure for unboxing the PostPro SF machines.

1. Remove the lid of the box by unscrewing the 6 x PC head screws. There are two located on the top, one on each long side and four on the vertical sides, two on each short side. Make sure to remove gloves when using rotary tools.







2. Once all the screws are removed, with two people, one standing on each long edge the lid can be removed. The first person should lift the lid and slide it to the other side, whilst standing on a set of steps, so that the other person can hold it whilst it leans on the top of the frame. The first person should then walk around and support the second person to lift the lid down. Place lid aside.



3. On the long side of the box which is labelled "ramp" remove the 2 x PC head screws holding one of the side panels on (start on the right-hand side). Make sure to remove gloves when using rotary tools.

4. Move to the short panel on the right and remove 9 x PC head screws holding the panel in place. Make sure the second person holds the panel in place so that it doesn't fall.

5. Once free, lift the door off the pallet and put to one side. This should be done with two people.



6. Move to the other short side and unscrew the screws holding the long side opposite the ramp to the short door. There should be 4 x PC head screws located along the left side of the short panel. Make sure that the second person is holding the long door opposite the ramp in place.



7. Return to the long side opposite the ramp and unscrew the 2 x PC head screws at the bottom of the panel, make sure the second person is still holding the long panel in place.

8. Once free, lift the long panel off the pallet and put aside. This should be done with two people.



CONFIDENTIAL

9. Go back to the final short side and remove the final 5 x PC head screws holding it in place. Again, make sure to hold it in place so it doesn't fall.

10. Lift of the panel and put to one side, this should be done with two people.

11. Finally move around to the ramp panel and remove the final 3 x PC head screws holding it to the pallet. Make sure to hold the panel in place.

12. Before lifting the panel out, make sure that the red wheel assemblies and ancillary items have not moved during transit which could cause them to fall. Lift off the panel and put to one side, this should be done with two people.



13. The wheel assemblies are connected in pairs, lift them off as such making sure to hold onto both when lifting to ensure they do not fall. Place to one side for use later. Also remove the foam which was located between the wheels and the machine.

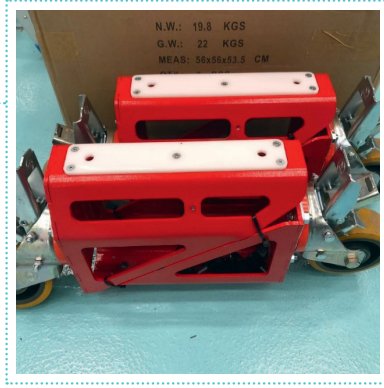

14. Remove the 2 x PC head screws holding the ramp to the base of the machine, make sure to hold it so that it doesn't fall.

15. Lift the ramp section up and move around to the opposite side of the box and place on the floor as per the photo. Make sure to align the tracks on the pallet with the tracks on the ramp, this should be done with two people.



16. Locate the two holes on the ramp which were used to secure it to the pallet and re-screw the 2 x PC head screws back into the bottom of the pallet. The aim of this is to hold the ramp onto the pallet so that it doesn't move when the machine is rolled off.

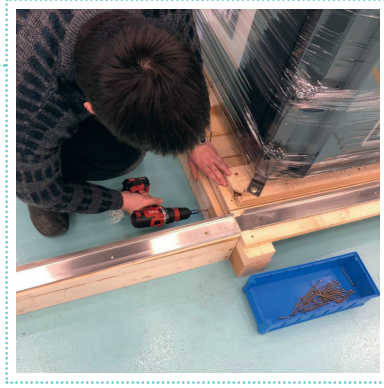

CONFIDENTIAL

17. Swap the head of the drill to a T-40 Torque Head and start unscrewing the 4 x torque screws holding the machine to the pallet. They can be difficult to remove so make sure to support the drill well to prevent it from jumping.



18. Unwrap the machine of the plastic and dispose of accordingly.

19. Disconnect each of the 4 supporting feet from the machine. This is done by unscrewing the 2 x wing nuts on each foot, make sure to keep the screws and feet together for future use.

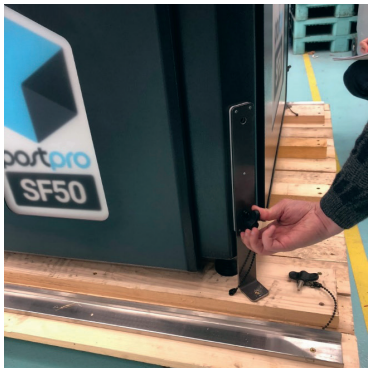

20. The machine now needs to be lifted off the pallet to allow the feet to be fitted. This is done by unscrewing the feet using a 17mm wrench to lift that side of the machine. This needs to be done gradually as to not unsettle the balance of the machine. It is recommended to do around 15 turns on each corner before working to the next foot.



The aim is to lift the machine so that the bottom of the angled section is 11cm from the pallet, see the figure below.



CONFIDENTIAL

21. Once the machine is at the correct height, unpack each of the red wheels by clipping the cable ties holding them together and take one to each corner of the machine.

22. Next screw the wheels onto the machine using the 2 x wing nuts. It is VITAL that all the wheels are facing backwards once complete. If they are not, the machine can topple when unloaded from the pallet. See the photo below:



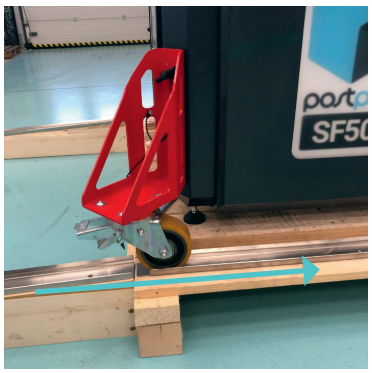

23. Apply the brake on one of the wheels so that the machine cannot move.

24. Lower the machine onto the wheels by re-lifting the feet into the machine. Do this using the 17mm wrench used before. Do this until the feet reach the bottom of the machine and nip in place to prevent them falling.

25. With two people holding the machine from either side of the ramp, remove the brake and roll the machine carefully down the ramp. Make sure to do this from either side so that there is no risk of tripping.

26. Once down, wheel the machine into the desired location and apply the brake again.

27. Using the 17mm wrench, screw each of the feet down again so that they lift the machine off the wheels. Make sure to do each corner equally to prevent the machine from tipping.

28. Remove the wheels using the two wing nuts and place them safely to one side. These need to be retained in case the machine needs to be moved in the future.

29. Next, place a spirit level on the top of each side to ensure the machine is level. Adjust the height of each foot accordingly until the machine is fully level.

30. Finally, remove the ramp by removing the 2 x PC head screws and place with the rest of the packaging.



PLEASE KEEP THE TRANSPORT BOX, WHEELS, BRACKETS AND BOLTS SO THAT THEY CAN BE USED AGAIN IN THE FUTURE SHOULD THE MACHINE NEED TO BE MOVED.

CONFIDENTIAL

CONTACT INFORMATION

For further information please contact AMT:

support@amtechnologies.com

EU: +44 114 3122 3344

US: +1 512 352 9393

