ADDITIVE MANUFACTURING TECHNOLOGIES

postpro3D™



UNBOXING GUIDE

April 2020 / V1.1

CONFIDENTIAL

ADDITIVE MANUFACTURING TECHNOLOGIES

postpro3D™

CONTENTS

1	**RISKS AND SAFETY WARNINGS**	**4**
2	**MACHINE OVERVIEW**	**5**
	2.1 MACHINE DIMENSIONS	5
	2.2 POSTPRO3D® MACHINE DIMENSIONS AND WEIGHT	6
	2.3 CRATE DIMENSIONS	6
3	**SHIPMENT AND DELIVERY**	**7**
	3.1 SHIPPING CRATE	7
	3.2 UNLOADING THE CRATE	7
	3.3 SAFETY MEASURES FOR UNLOADING	7
4	**ANCILLARY EQUIPMENT UNBOXING**	**8**
	4.1 BOFA AND LAUDA EQUIPMENT	8
	4.2 ADDITIONAL DELIVERY ITEMS	8
	4.3 BLASTX CANISTER	8
5	**POSTPRO3D UNBOXING**	**9**
	5.1 PERSONAL PROTECTION EQUIPMENT (PPE)	9
	5.2 TOOLS REQUIRED FOR UNBOXING	9
	5.3 UNBOXING PROCEDURE	10
6	**CONTACT INFORMATION**	**15**

CONFIDENTIAL

ADDITIVE MANUFACTURING TECHNOLOGIES

postpro3D™

DOCUMENT IS CONFIDENTIAL

Data supplied in this document shall not be duplicated, used or disclosed in whole, or in part, for any purpose other than evaluation. The contents will not be passed in any form verbal, paper or electronic to any other company or individual without the express permission of Additive Manufacturing Technologies Limited.

1 // RISKS AND SAFETY WARNINGS

DANGER Danger indicates an imminently hazardous situation, which, if not avoided, will result in death or serious injury.

WARNING Warning indicates a potentially hazardous situation, which, if not avoided, could result in death or serious injury.

CAUTION Caution indicates a potentially hazardous situation, which, if not avoided, may result in minor or moderate injury.

DANGER **Chemical Hazard: BlastX** may cause severe skin burns and permanent eye damage, including blindness. The chemical may also cause organ damage with prolonged exposure. Pregnant and breastfeeding women should not enter the processing room or operate PostPro3D®. The client must have an eye wash station and emergency shower available when using this consumable and follow the general lab safety precautions. The consumables may also cause an allergic skin reaction. Do not breathe the mist or vapour.

CAUTION **Chemical Hazard:** Avoid touching parts that have been partially or recently processed, even when wearing nitrile gloves. Ensure that all PostPro3D® process steps are concluded to the manufacturer's instructions before touching any processed parts with bare hands.

CAUTION **Chemical Hazard:** If an operator gets chemicals in their eye, immediately flush it out with water using the safety eye wash. Consult the MSDS for more information about treating eye exposure.

CAUTION **Chemical Hazard:** If an operator gets chemicals on their skin, immediately rinse with water. Consult the MSDS for more information about treating skin exposure.

CAUTION **Chemical hazard:** If a processed part is sticky, even after full processing, something may have gone wrong with the processing steps or the part maybe partially processed. Do not handle the part with bare hands and avoid any inhalation of fumes by using an appropriate mask with filter.

DANGER **Chemical Hazard:** Always keep the PostPro3D® machine closed when not processing to ensure no fumes are inhaled by operators. Keep waste containers closed all the time

CAUTION **Pinch Hazard:** The lid of the processing chamber is heavy. Close the lid carefully using the handles on the PostPro3D® to avoid pinching fingers or hands.

CAUTION **Electrical Hazard:** Do not open any door in the body of the device as there is an electric shock risk. The doors are for service entry only by AMT Support team only.

WARNING **Chemical warning:** Do not place processed parts in the mouth or give processed parts to children or to animals.

DANGER **Tipping Hazard:** Always use at least two people to move PostPro3D®. Unlock the castor heels at the base of the machine before attempting to move the machine. Lock the wheels once PostPro3D® is in its new position.

CONFIDENTIAL

2 // MACHINE OVERVIEW

2.1 // MACHINE DIMENSIONS

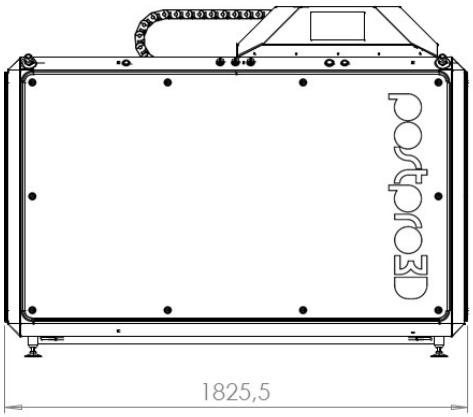

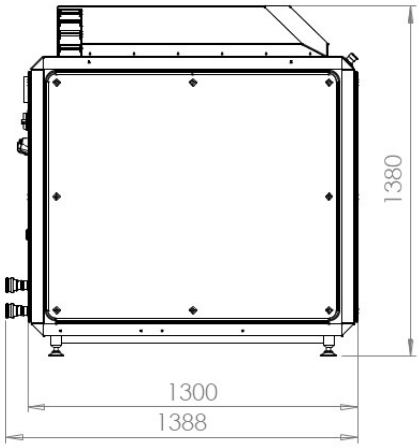

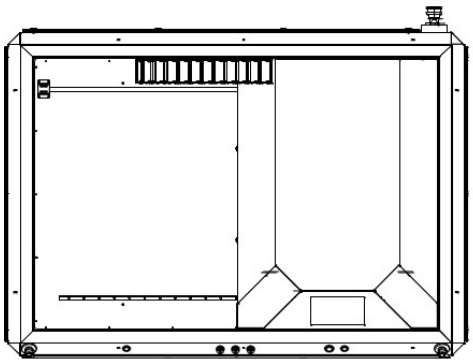

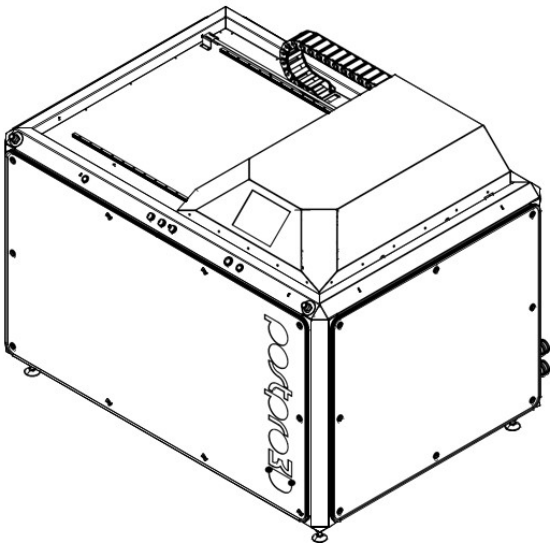

CONFIDENTIAL

2.2 // POSTPRO3D® MACHINE DIMENSIONS AND WEIGHT

	UNPACKED (NET)	
Dimension	Imperial	Metric
Height	55 in.	1380 mm.
Length	72 in.	1825 mm.
Width	51 in.	1300 mm.
Weight	2420 lbs.	1100 kg.

2.3 // CRATE DIMENSIONS

	POSTPRO3D	
Dimension	Imperial	Metric
Length	79 in.	2000 mm.
Width	59 in.	1500 mm.
Height	59 in.	1500 mm.
Weight	2750 lbs.	1250 kg.

CONFIDENTIAL

3 // SHIPMENT AND DELIVERY

AMT will help arrange shipment and customs clearance to the client's facility. The client is responsible for transporting the crates from point of delivery to the installation site based on the following shipment information.

3.1 // SHIPPING CRATE

• The PostPro3D® machine will arrive to the client's facility packed in a crate. The accessories and ancillary equipment will be supplied separately.

• The PostPro3D® machine crate will have the dimensions and weights as per Table 2.3.

• Once the PostPro3D® machine and accessories has been unloaded, the client will need to store the crates on-site in the unlikely event that the machine needs to be returned to AMT.

3.2 // UNLOADING THE CRATE

• Client will need to provide equipment for unloaded palletized crates from the delivery vehicle, typically a forklift truck and driver.

• Client will need to provide equipment to move the crate to the installation site, typically a forklift truck and driver and or machinery skates.

• Unloading can occur at, or near the installation site if there is sufficient clearance for the PostPro3D® machine.

• The crates should be inspected for damage and the shipping tilt/impact indicators should be reviewed. If any damage has occurred during transit, then this should be noted and logged with the shipping company at the point of receipt.

3.3 // SAFETY MEASURES FOR UNLOADING

Unloading procedures must be performed by trained personnel in accordance with occupational health and safety measures enforced at the install country or state, which may include but not limited to:

• Clear of other traffic, pedestrians and people not involved in loading or unloading.

• Clear of overhead electric cables so there is no chance touching them, or of electricity jumping to 'earth' through machinery, loads or people.

• Safety equipment must be considered. Mechanical equipment and heavy moving loads are dangerous.

• Guards or skirting plates may be necessary if there is a risk of anything being caught in machinery (for example dock levellers or vehicle tail lifts). There may be other mechanical dangers and safety procedures to be considered.

• Ensure the vehicle or trailer has its brakes applied and all stabilisers are used. The vehicle should be as stable as possible.

• Always check the floor or deck of the loading area before loading to make sure it is safe. Look out for debris, broken boarding, etc.

• Loading should allow for safe unloading.

CONFIDENTIAL

4 // ANCILLARY EQUIPMENT UNBOXING

4.1 // BOFA AND LAUDA EQUIPMENT

The BOFA AD1500iQ Extractor and Lauda UC4 Chiller will be shipped directly from the manufacturer. Upon delivery of these items please take photographs of the delivered items before and after unpacking the machines and forward these on to your AMT representative.

If there are any issues with the deliveries from either Lauda or BOFA please inform AMT immediately.

Prior to the installation it is only necessary to configure the electrical power connections for each machine. Please do not connect the extraction or coolant hoses, this will be completed by AMT during the installation.

4.2 // ADDITIONAL DELIVERY ITEMS

In addition to the PostPro3D®, BOFA extractor and Lauda Chiller deliveries you will receive a shipment of additional items which I required for the installation of the PostPro3D®. This shipment will contain the following items:

- Coolant Hoses x2
- Extraction Duct
- Processing Racks
- Diffuser
- Glycol

It is not necessary to do anything with these items. Prior to the installation, AMT will contact you to confirm all items have been delivered.

4.3 // BLASTX CANISTER

A virgin canister of BlastX will be delivered separately from all other shipments. It is not necessary to do anything with this. Prior to the installation, AMT will contact you to confirm all items have been delivered.

5 // POSTPRO3D UNBOXING

It is the responsibility of the customer to unbox the PostPro3D® prior to the installation taking place. The unboxing should take place as close as possible to the final location of the machine.

Prior to unboxing check the ShockWatches located on box have not been triggered. In the event of a ShockWatch showing signs of mis-handling contact AMT immediately.

Ensure that the there is suitable space to safely unbox the PostPro3D®.

Two people are required to unbox the PostPro3D®.

5.1 // PERSONAL PROTECTION EQUIPMENT (PPE)

The following PPE should be worn when unboxing the crate:

- Safety shoes with protected toes
- Safety helmet
- Safety glasses
- Safety gloves

⚠ **It is the responsibility of the customer to ensure the PPE being worn is compliant with the company, local and national safety regulations.**

5.2 // TOOLS REQUIRED FOR UNBOXING

The following tools are necessary for unboxing the PostPro3D®.

- Drill
- Pozidrive Screwdriver Drill Bit
- Cutters
- Forklift

⚠ **It is the responsibility of the customer to ensure the tools being used are compliant with the company, local and national safety regulations and the users are sufficiently trained.**

5.3 // UNBOXING PROCEDURE

Please follow the below procedure for unboxing the PostPro3D®.



1. Remove the screws from the top panel of the crate, please note screws are removed from the top and sides of the crate.





2. Remove the top panel of the crate.



CONFIDENTIAL

3. **Remove the screws from the front panel of the crate.**



4. **Remove the front panel of the crate.**



5. **Remove the screws from the left panel of the crate; Remove the top left screw securing the left panel to the real panel until last.**

6. **Remove the left panel of the crate.**



CONFIDENTIAL

7. Remove the screws from the rear panel of the crate. Remove the top left screw securing the rear panel to the right panel until last.

8. Remove the rear panel of the crate.



9. Remove the screws from the right panel of the crate.

10. Remove the right panel of the crate.



11. Cut the straps on the feet of the PostPro3D®.



CONFIDENTIAL

12. **Use a forklift to lift the PostPro3D® from the base of the crate.**



13. **Extend the feet of the PostPro3D so the distance between the base of the feet and the frame is 9cm.**

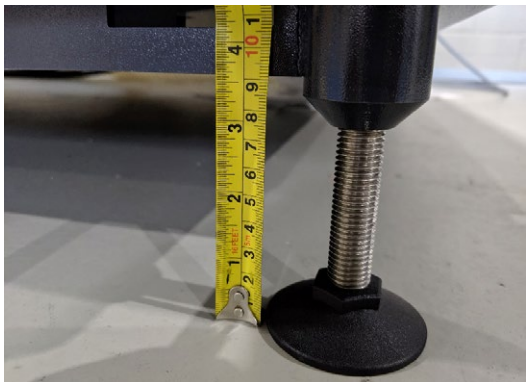

14. **Using the forklift position the PostPro3D® into a final location.**



CONFIDENTIAL

15. **Unwrap the cellophane from the PostPro3D®. Do not use a knife, tear the cellophane to remove.**

16. **The PostPro3D® is now ready for connections and installations.**



CONFIDENTIAL

ADDITIVE MANUFACTURING TECHNOLOGIES

postpro3D™

5 // CONTACT INFORMATION

For further information please contact AMT:

support@amtechnologies.com

EU: +44 114 3122 3344

US: +1 512 352 9393



CONFIDENTIAL