amt postpro®



SITE PREPARATION GUIDE

FEBRUARY 2023 / US.AC.V3.0

CONFIDENTIAL

CONTENTS

1	**RISKS AND SAFETY WARNINGS**	**4**
2	**EQUIPMENT DESCRIPTION**	**5**
	1. OVERVIEW	5
	2. LAYOUT	5
3	**DIMENSIONS AND WEIGHT**	**6**
	1. POSTPRO3D® MACHINE DIMENSIONS AND WEIGHT	6
	2. POSTPRO3D® CRATE DIMENSIONS	7
	3. EXTRACTION SYSTEM (BOFA AD1500IQ) / COOLING SYSTEM (LAUDA ULTRACOOL – UC4) DIMENSIONS AND WEIGHT	7
4	**ELECTRICAL POWER REQUIREMENTS**	**8**
	1. POSTPRO3D®	8
	2. COOLING SYSTEM	8
	3. EXTRACTION SYSTEM	8
5	**SHIPMENT AND DELIVERY**	**9**
	1. ITEMS SUPPLIED	9
	2. SHIPPING CRATE	9
	3. UNLOADING THE CRATE	9
	4. SAFETY MEASURES FOR UNLOADING	10
	5. UNBOXING THE POSTPRO3D®	10
6	**ROOM AND CONNECTION LAYOUT**	**11**
	1. POSTPRO3D® RECCOMENDED OPERATING ROOM DIMENSIONS AND SPACE REQUIREMENTS	11
	2. POSTPRO3D® CONNECTION LAYOUT (USA)	12
	3. ACCESS AND WORKING AREA	13
	4. WORKSTATION AREA	13
	5. SAFETY EQUIPMENT IN THE POSTPRO3D MACHINE ROOM	13
	6. CHEMICAL STORAGE	14
	7. SAFETY EYEWASH AND SHOWER	14
	8. VENTILATION	14
	9. CHEMICAL SPILLS	14
	10. PRECAUTIONS IN THE EVENT OF FIRE	14
7	**VENTILATION AND ENVIRONMENTAL REQUIREMENTS NETWORK**	**15**
8	**CONNECTIVITY**	**16**
	1. CONNECTIVITY REQUIREMENTS	16
	2. REMOTE ACCESS AND DATA LOGGING	16
	3. CONNECTIVITY BENEFITS	16
	4. SECURITY	16
9	**CONSUMABLES WASTE**	**17**
10	**DISPOSAL DE-**	**18**
11	**COMMISSIONING**	**19**
12	**AMT SITE PREPERATION CHECKLIST**	**20**
	1. SITE PREPERATION CHECKLIST	20
13	**CONTACT INFORMATION**	**23**

CONFIDENTIAL

DOCUMENT IS CONFIDENTIAL

Data supplied in this document shall not be duplicated, used or disclosed in whole, or in part, for any purpose other than evaluation. The contents will not be passed in any form verbal, paper or electronic to any other company or individual without the express permission of Additive Manufacturing Technologies Limited.

1 // RISKS AND SAFETY WARNINGS

⚠DANGER Danger indicates an imminently hazardous situation, which, if not avoided, will result in death or serious injury.

⚠WARNING Warning indicates a potentially hazardous situation, which, if not avoided, could result in death or serious injury.

⚠CAUTION Caution indicates a potentially hazardous situation, which, if not avoided, may result in minor or moderate injury.

⚠DANGER **Chemical Hazard: PostProBlastX®™** may cause severe skin burns and permanent eye damage, including blindness. The chemical may also cause organ damage with prolonged exposure. Pregnant and breastfeeding women should not enter the processing room or operate PostPro3D®. The client must have an eye wash station and emergency shower available when using this consumable and follow the general lab safety precautions. The consumables may also cause an allergic skin reaction. Do not breathe the mist or vapour.

⚠CAUTION **Chemical Hazard:** Avoid touching parts that have been partially or recently processed, even when wearing nitrile gloves. Ensure that all PostPro3D® process steps are concluded to the manufacturer's instructions before touching any processed parts with bare hands.

⚠CAUTION **Chemical Hazard:** If an operator gets chemicals in their eye, immediately flush it out with water using the safety eye wash. Consult the MSDS for more information about treating eye exposure.

⚠CAUTION **Chemical Hazard:** If an operator gets chemicals on their skin, immediately rinse with water. Consult the MSDS for more information about treating skin exposure.

⚠CAUTION **Chemical hazard:** If a processed part is sticky, even after full processing, something may have gone wrong with the processing steps or the part maybe partially processed. Do not handle the part with bare hands and avoid any inhalation of fumes by using an appropriate mask with filter.

⚠DANGER **Chemical Hazard:** always Keep the PostPro3D® machine door closed when not processing to ensure no fumes are inhaled by operators. Keep waste containers closed all the time

⚠CAUTION **Pinch Hazard:** The lid of the processing chamber is heavy. Close the lid carefully using the handles on the PostPro3D® to avoid pinching fingers or hands.

⚠CAUTION **Electrical Hazard:** Do not open any door in the body of the device as there is an electric shock risk. The doors are for service entry only by AMT Support team only.

⚠WARNING **Chemical warning:** Do not place processed parts in the mouth or give processed parts to children or to animals.

⚠DANGER **Tipping Hazard:** Always use at least two people to move PostPro3D®. Unlock the castor heels at the base of the machine before attempting to move the machine. Lock the wheels once PostPro3D® is in its new position.

CONFIDENTIAL

2 // EQUIPMENT DESCRIPTION

1. // OVERVIEW

The PostPro3D® machine offers a controllable surface finish which brings surface roughness (Ra values) of 3D printed polymer parts down to 0.3 µm without the loss of detail and definition. In addition, the smoothing process naturally seals the pores on the surface of the 3D printed part, which significantly enhances the water-protective properties of the material.

The machine has been successfully tested with a range of polymers including Polyamide (PA)-12, PA- 11, PA-6, Thermoplastic Polyurethane (TPU), ULTEM 9085, TPE-210 elastomer materials, Polymethyl Methacrylate (PMMA) Acrylonitrile butadiene styrene (ABS) and many more. It is capable of processing
Multi Jet Fusion (MJF), Laser Sintered (LS), High Speed Sintered (HSS) and FDM 3D printed parts to the desired surface roughness using smart algorithms and the proprietary BLAST® process.



2.2 // LAYOUT

The PostPro3D® is supplied with two auxiliary units, an extraction system and a chiller to support its operation.



CONFIDENTIAL

3 // DIMENSIONS AND WEIGHT

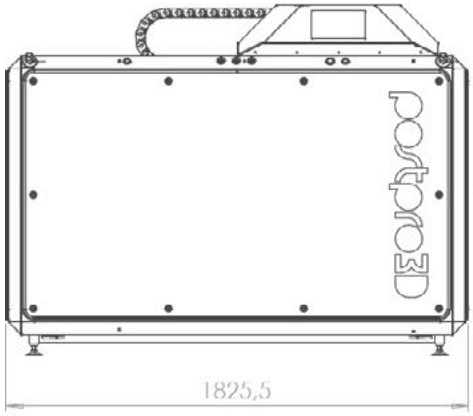

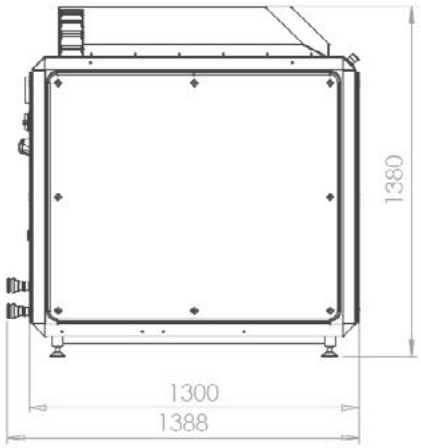

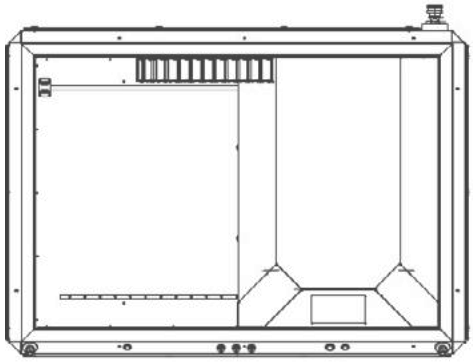

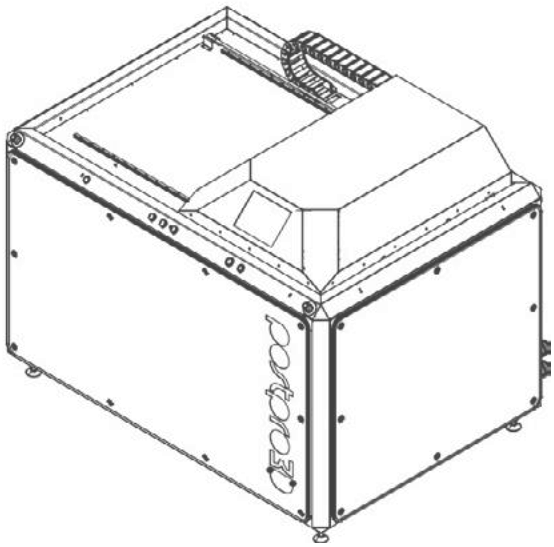

3.1 // POSTPRO3D® MACHINE DIMENSIONS AND WEIGHT

	UNPACKED (NET)	
Dimension	INCHES / Lbs	MM / KG
Height	55	1380
Length	72	1825
Width	51	1300
Weight	2420	1100

CONFIDENTIAL

3.2 // POSTPRO3D® CRATE DIMENSIONS

	POSTPRO3D	
Dimension	INCHES / Lbs	MM / KG
Length	79	2000
Width	59	1500
Height	59	1500
Weight	2750	1250

3.3 // EXTRACTION SYSTEM (BOFA AD1500IQ) / COOLING SYSTEM (LAUDA ULTRACOOL – UC4) DIMENSIONS AND WEIGHT

	Lauda Ultracool UC4		BOFA AD1500iQ	
Dimension	INCHES / Lbs	MM / KG	INCHES / Lbs	MM / KG
Height	25	635	48	1197
Width	26	640	32	790
Length	26	644	24	600
Weight	188	85	320	145

CONFIDENTIAL

4 // ELECTRICAL POWER REQUIREMENTS

⚠ The client is responsible for connecting all supplied equipment to the building's power supply prior to the installation date.

1. // POSTPRO3D®

The PostPro3D® machine must be connected to the following electrical supply:

Specification	UK/EU
Connection	CEE socket 400 V / 32 A
Voltage	400 V 3~/PE
Voltage Fluctuations	+10 % to -10 %
Frequency	50 Hz
Rated Short Circuit Current	10 kA
Nominal Power	23 kW
Power Consumption (typical, during processing)	9.7 kW
Mains Fuse Protection	3 x 32 A (characteristic C)
Length of Mains Cable (scope of delivery)	6 m

In addition, an isolation switch to cut power to the machine should be located outside of the room. In which the PostPro3D® is situated.

4.2 // COOLING SYSTEM

- Single Phase, 230V, 50Hz, 16A (Type C Breaker)
- Refer to separate manual for more information (Attached)

4.3 // EXTRACTION SYSTEM

- Single Phase, 230V, 50Hz, 24A (Type C Breaker)
- Refer to separate manual for more information (Attached)

CONFIDENTIAL

5 // SHIPMENT AND DELIVERY

Additive Manufacturing Technologies will help arrange shipment and customs clearance to the client's facility. The client is responsible for transporting the crates from point of delivery to the installation site based on the following shipment information.

1. // ITEMS SUPPLIED

- PostPro3D®
- Lauda Chiller
- BOFA Extractor
- Processing Racks x 2
- Diffuser
- Coolant Hoses x 2
- Extractor Hose
- Panel Keys
- Glycol
- PostProBlastX Virgin Canister
- PostProBlastX Empty Canister

5.2 // SHIPPING CRATE

- The PostPro3D® machine will arrive to the client's facility packed in a crate. The accessories and ancillary equipment will be supplied separately.

- The PostPro3D® machine crate will have the dimensions and weights as per Table 3.2

- Once the PostPro3D® machine and accessories has been unloaded, the client will need to store the crates on-site in the unlikely event that the machine needs to be returned to AMT.

5.3 // UNLOADING THE CRATE

- It is the responsibility of the client to unload the crate from the delivery vehicle and position the crate in a suitable position for unpacking.

- Unloading can occur at, or near the installation site if there is sufficient clearance for the PostPro3D® machine.

- The crates should be inspected for damage and the shipping tilt/impact indicators should be reviewed. If any damage has occurred during transit, then this should be noted and logged with the shipping company at the point of receipt.

CONFIDENTIAL

5.4 // SAFETY MEASURES FOR UNLOADING

Unloading procedures must be performed by trained personnel in accordance with occupational health and safety measures enforced at the install country or state, which may include but not limited to:

• Clear of other traffic, pedestrians and people not involved in loading or unloading.

• Clear of overhead electric cables so there is no chance touching them, or of electricity jumping to 'earth' through machinery, loads or people.

• Safety equipment must be considered. Mechanical equipment and heavy moving loads are dangerous.

• Guards or skirting plates may be necessary if there is a risk of anything being caught in machinery (for example dock levellers or vehicle tail lifts). There may be other mechanical dangers and safety procedures to be considered.

• Ensure the vehicle or trailer has its brakes applied and all stabilisers are used. The vehicle should be as stable as possible.

• Always check the floor or deck of the loading area before loading to make sure it is safe. Look out for debris, broken boarding, etc.

• Loading should allow for safe unloading.

5.5 // UNBOXING THE POSTPRO3D®

It is the responsibility of the customer to unbox the PostPro3D® from the shipping crate in which it is supplied. For instructions on how to do this please refer to the PostPro3D® Unboxing Guide.

CONFIDENTIAL

6 // ROOM AND CONNECTION LAYOUT

Details are given below of the minimum processing room size and working area required for operating the PostPro3D®. The enclosed room and access must be ready in advance of delivery.

⚠ **The client is responsible for unpacking the crate and siting the equipment in the designated install room. Mishandling of the PostPro3D® machine during installation and its accessories may damage the device, requiring it to be returned to AMT.**

6.1 // POSTPRO3D® RECCOMENDED OPERATING ROOM DIMENSIONS AND SPACE REQUIREMENTS

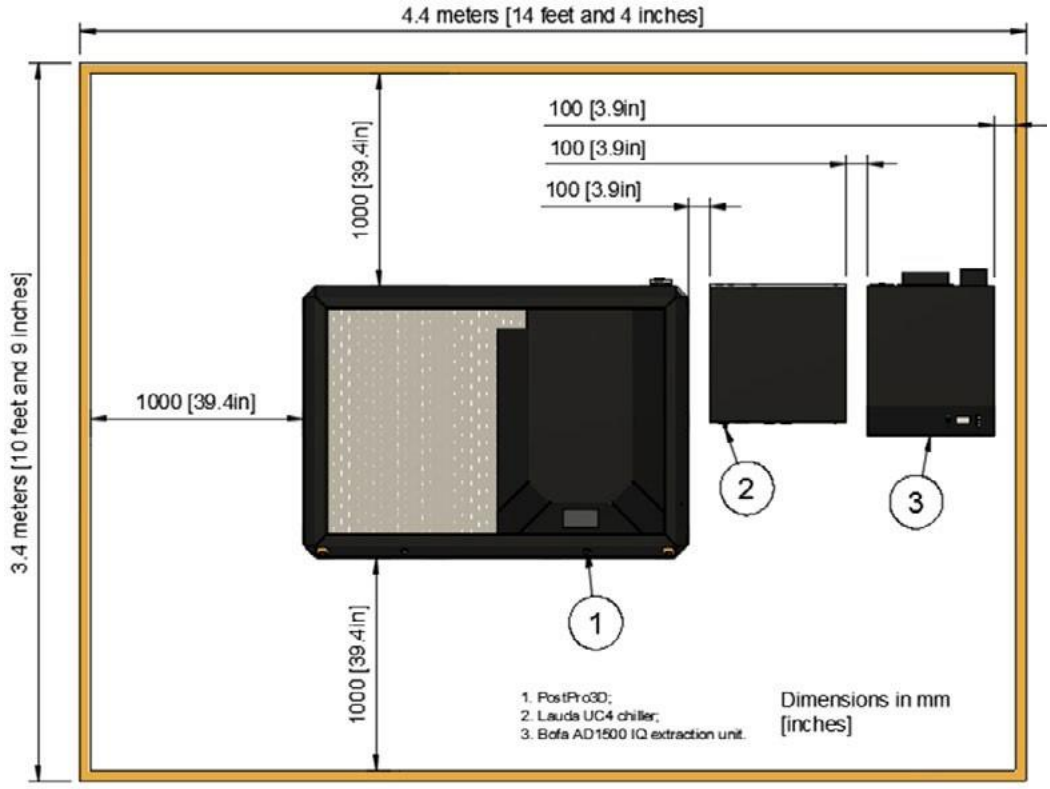

⚠ **Free access must be ensured around the machine as indicated above for installation and maintenance procedures.**

CONFIDENTIAL

6.2 // POSTPRO3D® CONNECTION LAYOUT (USA)

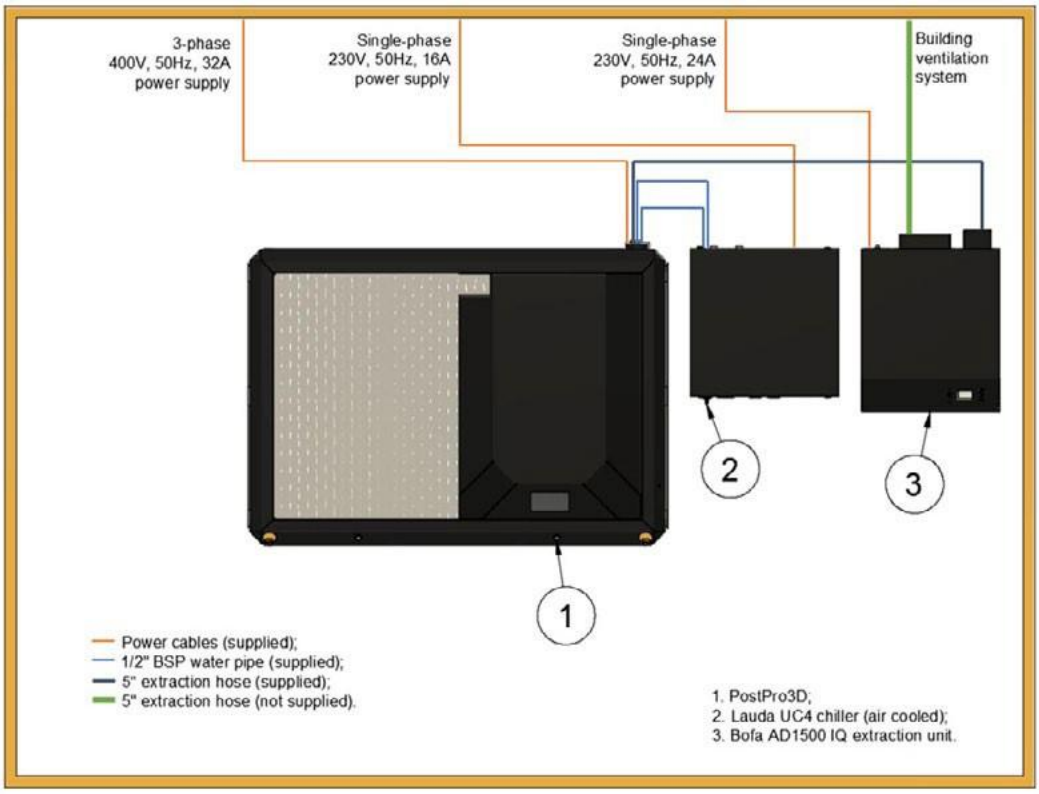

CONFIDENTIAL

6.3 // ACCESS AND WORKING AREA

Additive Manufacturing Technologies require the client to prepare the PostPro3D® machine room prior to installation and ensure that the room conforms to the minimum dimensions shown in Section 6.1.
The PostPro3D® must be positioned in such a way to ensure access to the power outlet and switches, including emergency shutoff switches.

The following conditions are required for access to and within the working area:

- Level, hard flooring (no carpet) that can handle a device weight in accordance with Table 3.1 and 3.3.
- The floor must be hard, flat, and level. Unevenness of the area for the machine should be less than 5 mm/m² (0.0182 inches/Square foot)
- The floor in the PostPro3D® machine room shall be easy to clean and chemically resistant.
- The PostPro3D® machine and accessories require a clear space of at least 5.3 meters (17 feet) in width and 3.5 meters (11 feet) clearance in depth for service.
- 1.2 meters (4 feet) of clearance must be provided from the back of the machine to plug in power, extraction and Ethernet cords, as shown in drawing in Section 3.1.
- The ceiling height should be greater than 2 meters (6.6 feet) higher than the top of the PostPro3D® machine.
- PostPro3D® should be installed in a vibration free area and should not be located near machinery or equipment that cause high vibration levels.
- PostPro3D® should only be installed and operated in a closed room.
- Access to the PostPro3D® machine room shall be level and without steps.
- Inform AMT in advance if seismic anchoring is required.

6.4 // WORKSTATION AREA

The client is responsible for supplying a work bench next to PostPro3D® machine for pre-preparation and unloading of process racks. The client should have enough space for:

- One bench
- Shelves and cabinets must be near PostPro3D® to allow convenient and safe storage of tools, accessories, consumables, training manuals, etc.

6.5 // SAFETY EQUIPMENT IN THE POSTPRO3D MACHINE ROOM

Additive Manufacturing Technologies recommends the following minimum safety equipment to run PostPro3D®:

1. MSDS Safety sheets displayed in a prominent position Safety
2. shower
3. Eye wash station
4. Proper Personal Protective Equipment (PPE) in the form of:
    a. Disposable nitrile gloves
    b. Closed toe safety shoes
    c. Laboratory Spill resistant coat
    d. Close fitting chemical eye protection
    e. Half face mask with AX-P3 type filters. Spill
5. Clean-up Kit

⚠ **It is the responsibility of the customer to ensure the PPE being worn is compliant with the company, local and national safety regulations.**

CONFIDENTIAL

6. // CHEMICAL STORAGE

AMT recommends that the client stores the chemicals safely and to a standard that is in accordance with regulations, fire department and insurance requirements, and in accordance with Section 7 of the relevant chemical MSDS.

7. // SAFETY EYEWASH AND SHOWER

The client will be using chemicals that may cause serious eye damage and skin burns. Before starting to use PostPro3D® the client must establish at least one working eye-wash station near the machine and have a safety shower available.

If chemicals are splashed into eyes, immediately flush the chemical out with water using the safety eye wash. Consult the MSDS for more information about treating eye exposure.

If chemicals get on skin, immediately rinse with water. Consult the MSDS for more information about treating skin exposure.

8. // VENTILATION

The PostPro3D® machine shall only be operated in enclosed room, separate from other equipment and in conjunction with an extraction system. The minimum ventilation required is set out in Section.

9. // CHEMICAL SPILLS

AMT recommend that before installing PostPro3D® the client establishes a procedure on how to handle chemical spills. PostPro3D® is designed to prevent spills or leakages as the chemicals used are within sealed units. However, a spill may occur if the equipment is damaged or mistreated in some way or a leak occurs in the internal pipework. All spills should be reported to the client's safety officer and AMT.

10. // PRECAUTIONS IN THE EVENT OF FIRE

AMT recommend that before installing PostPro3D® the client should establish a procedure on how to handle fires in or near the PostPro3D® machine room, just as the client will have done with any other machinery has been installed. These procedures should focus on the fighting fires where high voltages are being used and the potential by-products produced from combusted polymers and processing chemicals form toxic gases and fluids.

The polymer parts processed in PostPro3D® are flammable. Ensure firefighting notes and safety datasheets for the plastic polymers are available to the operator and fire fighters. Match the extinguishing agent and the extinguishing units to the general local conditions. During firefighting observe the locally applicable national regulations.

PostProBlastX™ is non-flammable. However, if high temperatures are reached in a fire the polymer parts and the PostProBlastX™ may decompose and form Carbon Dioxide (CO2), Carbon Monoxide (CO) and Hydrogen fluoride (HF) gases.

Refer to the hydrogen fluoride gas and hydrofluoric acid MSDS for instructions as to how to handle this gas/acid. Hydrogen fluoride gas and hydrofluoric acid are extremely corrosive. Fire fighters should be informed of the potential of HF in the event of a fire.

CONFIDENTIAL

7 // VENTILATION AND ENVIRONMENTAL REQUIREMENTS

The PostPro3D® shall not be installed in potentially explosive atmosphere.

Inhaling vapours from the thermal decomposition of plastic powder/ components or from PostProBlastX™ consumables can cause health problems.

The PostPro3D® machine shall only be operated in enclosed room, separate from other equipment and in conjunction with an extraction system.

The supplied extraction system ensures that the minimum volumetric flow rate is continuously extracted from the PostPro3D machine. The extraction serves to cool the machine as well as provide a triple redundancy in case of machine failure. The extraction system shall meet the minimum following requirements:

- Volumetric flow rate: Minimum 1000 m3/h (589 cfm)
- Diameter of extraction waste air connecting pipe: 125 mm (5 inches)
- Extracted waste air from the BOFA AD 1500iq is not allowed to be fed back into any working room and should be vented into the atmosphere.
- Extracted waste air should be passed through appropriate activated carbon and HEPA filters before being exhausted into the environment. The client should consult their local legislation regarding requirements.
- Provide AMT Support Team with an extraction air hose of adequate length for the installation of the extraction unit.
- The maximum length for air duct vent should not exceed 5 meters (16 feet).
    - This length should be decreased by .75 meters (2.5 feet) for every 45-degree bend the duct makes and 1.5 meters (5 feet) for every 90-degree bend the duct makes.

In addition, the installation room must have:

- Heating, Ventilation and Air Conditioning (HVAC) to ensure constant temperature and humidity.
- An air changes (ACH) of at least 15-30 per hour.
- **Temperature control between 15°C (59 °F) and 20°C (68°F).**
- Humidity control as follows
- 15 - 20 °C (59 -68°F) at 30-40 % relative atmospheric humidity
- Noise emission (noise pressure level emissions): < 70 dB(A)
- Free of dust and particulate matter
- No single-sided local heating or cooling of the machine, such as by a radiator or air-conditioner or solar irradiation through a window/loading door or irregular flow of air.

CONFIDENTIAL

8 // NETWORK CONNECTIVITY

The PostPro3D® machine is a networked device. It communicates with AMT servers securely via the inbuilt 3G/4G modem.

1. // CONNECTIVITY REQUIREMENTS

The PostPro3D® process control computer is permanently connected to the internet via 3G/4G modem, however in case no 3G/4G network is accessible, customers are required to connect to the local network via Ethernet or Wi-Fi. In such case, the outgoing HTTPS port (TCP 443) must be opened in the firewall (no incoming network ports need to be opened).

⚠ **The PostPro3D® machine requires a wired ethernet connection to a network that offers un- interrupted access to the Internet. "Guest networks" that require regular renewal of credentials are not sufficient in this regard. PostPro3D® does not support Wi-Fi.**

2. // REMOTE ACCESS AND DATA LOGGING

PostPro3D® includes a remote monitoring feature which logs internal machine values throughout the uptime of the machine. These include, but are not limited to:

- Process chamber pressure;
- Process and intermediate chamber temperature;
- Coolant inlet temperature;
- Process parameters including time settings, temperature and pressure setpoints and solvent quantity;
- Machine internal process state;
- Machine emergency state and error code;
- Machine lid status (open/closed, locked/unlocked);
- Oil temperature;
- Run number;
- Consumable levels;
- Vacuum pump temperatures;
- Machine total uptime.

8.3 // CONNECTIVITY BENEFITS

Tracking performance data of the PostPro3D® substantially reduces cost and time for service and allows a better control of your machine. The data gathered is directly used by AMT's R&D team to improve process performance, usability and safety of our systems. All newly discovered insights are shared amongst the global fleet of PostPro3D® machines via Over-the-Air (OTA) software updates, allowing the machines to become better with time. You will be notified before any updates take place. Please do not attempt to operate the PostPro3D® during an update.

8.4 // SECURITY

Data is acquired from the PostPro3D® machines using a remote access industrial gateway which sends data via an encrypted data tunnel to a remote management cloud platform. The platform is secured by unique 2-step verification methods and communication is secured using Secure Socket Layer (SSL) encryption, which is the same method banks use for secure online transactions.

CONFIDENTIAL

9 // CONSUMABLES

The PostPro3D® machine must only be re-supplied with consumables by an authorised member of the AMT support team. No attempt must be made to open or re-fill the machine by the client. Do not use any consumables other than the PostProBlastX™ supplied by AMT.

CONFIDENTIAL

10 // WASTE DISPOSAL

The client is responsible for having liquid and solid waste management in place and is responsible for disposing of all liquid and solid waste according to the local laws and regulations.

The client must follow its facility's procedures and all federal, state, and local regulations describing the disposal of hazardous waste.

The PostPro3D® is closed loop system, as a result of this there is no liquid or solid hazardous waste to dispose of. Once the PostProBlastX™ recovery canister has been filled, AMT will arrange for the collection of this canister which is then returned to an AMT facility for processing.

Any other solid non-hazardous waste should be disposed of in a general lab waste container in accordance to local regulations.

CONFIDENTIAL

11 // DE-COMMISSIONING

AMT will be responsible for de-commissioning of the PostPro3D machine. Contact AMT technical support for details and arrangements.

CONFIDENTIAL

12 // AMT SITE PREPERATION CHECKLIST

Please fill out the following client information and site preparation checklist. Once complete, please sign and return to AMT.

Important Client Information:

1. If you have questions or problems in providing anything described in the checklist above, please contact AMT for assistance. In addition, AMT reserves the right to reschedule the installation dependent upon the readiness of your facility.

2. Should your site not be ready for whatever reasons, please contact AMT as soon as possible to re- arrange any services that have been scheduled.

3. Please be aware that AMT will not schedule the install until checklist is received and approved.

IF UPON ARRIVAL AT THE CUSTOMER FACILITY IT IS DECIDED THAT THE CONDITIONS OF THE SITE PREPERATION GUIDE HAVE NOT BEEN MET, THE FACILITY IS NOT READY OR THE WORKSPACE IS DEEMED UNSAFE AMT RESERVE THE RIGHT TO REFUSE INSTALLTION. IN THIS CASE THE CUSTOMER WILL BE CHARGED FOR LOST TIME AND TRAVEL EXPENSES.

12.1 // SITE PREPERATION CHECKLIST

Make sure that the conditions stated in the checklist are met at the time of delivery and commissioning of the machine and the accessories.

Company Name	
Delivery Address	
Device Shipment Important Info	
Contact Phone Number	
Contact Email Address	

CONFIDENTIAL

1. // PHOTOS OF INSTALL SITE

- [ ] Provide photographs of chosen installation site.

2. // DELIVERY, STORAGE / UNLOADING, TRANSPORT

- [ ] Forklift truck is available
- [ ] Lifting truck is available
- [ ] Transport routes to the place where the machine is to be installed or storage area are clear Transport routes are of adequate size
- [ ] There is no unevenness or steps along the transport route
- [ ] Floor loading capacity of the transport routes is greater than the total weight of the transport units (scope of delivery + means of transport)
- [ ] Width and height of doorways meet the requirements specified

If the machine and the accessories are stored temporarily until installation and commissioning: Storage area

- [ ] meets the requirements

3. // SPECIFIED PLACE WHERE THE MACHINE IS TO BE INSTALLED

- [ ] Floor loading capacity and floor characteristics comply with the requirements Space for installing the machine and the accessories is sufficient Accessibility and escape routes have been considered
- [ ] Minimum distances between machine, accessories, room walls, etc. are met
- [ ] Space requirements for possible addition of additional accessories have been considered. Preparation table in the immediate vicinity of the PostPro3D is available.

4. // AMBIENT CONDITIONS

- [ ] Room temperature complies with the specification Relative atmospheric humidity is in the specified range EMC safety is ensured
- [ ] Other ambient conditions are met

5. // MAINS POWER SUPPLY

- [ ] Three-phase mains power supply is available for the PostPro3D machine. Mains power supply is available for the Cooling system
- [ ] Mains power supply is available for the Extraction system

6. // MACHINE EXTRACTION

- [ ] Extraction connection complies with the specification Room ACH level complies with the specification.
- [ ] Connection for extraction system is prepared Waste air hose of adequate length is available.

7. // NETWORK CONNECTION FOR DATA TRANSFER

- [ ] Complies with the specification.

CONFIDENTIAL

12.1.8 // CLIENT SAFETY PRECAUTIONS

- All access doors to the room where the machine is installed can be locked
- There are warning signs on all access doors for the room where the machine is installed and storage rooms
- Locally applicable national regulations in relation to safety have been observed Wash
- basin with eye washing facility is set up
- An adequate number of suitable fire extinguishers (extinguishing equipment) is available

Client Signatory Name	
Client Signature	
Title	
Date	

CONFIDENTIAL

13 // CONTACT INFORMATION

For Further information please contact Additive Manufacturing Technologies:

support@amtechnologies.com EU: +44

114 3122 3344

US: +1 413 204 3599



CONFIDENTIAL