ADDITIVE MANUFACTURING TECHNOLOGIES

postpro3D™



PACKAGING GUIDE

April 2020/ V1.1

CONFIDENTIAL

ADDITIVE MANUFACTURING TECHNOLOGIES

postpro3D™

CONTENTS

1	**RISKS AND SAFETY WARNINGS**	**4**
2	**MACHINE OVERVIEW**	**5**
2.1	MACHINE DIMENSIONS	5
2.2	POSTPRO3D® MACHINE DIMENSIONS AND WEIGHT	5
2.3	CRATE DIMENSIONS	5
3	**POSTPRO3D PACKAGING**	**6**
3.1	SHIPPING CRATE	6
3.2	PACKING THE CRATE	6
3.3	SAFETY MEASURES FOR PACKAGING	6
3.4	PERSONAL PROTECTION EQUIPMENT (PPE)	6
3.5	TOOLS REQUIRED FOR PACKAGING	7
3.6	PACKAGING PROCEDURE	7
4	**CONTACT INFORMATION**	**10**

CONFIDENTIAL

ADDITIVE MANUFACTURING TECHNOLOGIES

postpro3D™

DOCUMENT IS CONFIDENTIAL

Data supplied in this document shall not be duplicated, used or disclosed in whole, or in part, for any purpose other than evaluation. The contents will not be passed in any form verbal, paper or electronic to any other company or individual without the express permission of Additive Manufacturing Technologies Limited.

1 // RISKS AND SAFETY WARNINGS

⚠DANGER Danger indicates an imminently hazardous situation, which, if not avoided, will result in death or serious injury.

⚠WARNING Warning indicates a potentially hazardous situation, which, if not avoided, could result in death or serious injury.

⚠CAUTION Caution indicates a potentially hazardous situation, which, if not avoided, may result in minor or moderate injury.

⚠DANGER **Chemical Hazard: BlastX** may cause severe skin burns and permanent eye damage, including blindness. The chemical may also cause organ damage with prolonged exposure. Pregnant and breastfeeding women should not enter the processing room or operate PostPro3D®. The client must have an eye wash station and emergency shower available when using this consumable and follow the general lab safety precautions. The consumables may also cause an allergic skin reaction. Do not breathe the mist or vapour.

⚠CAUTION **Chemical Hazard:** Avoid touching parts that have been partially or recently processed, even when wearing nitrile gloves. Ensure that all PostPro3D® process steps are concluded to the manufacturer's instructions before touching any processed parts with bare hands.

⚠CAUTION **Chemical Hazard:** If an operator gets chemicals in their eye, immediately flush it out with water using the safety eye wash. Consult the MSDS for more information about treating eye exposure.

⚠CAUTION **Chemical Hazard:** If an operator gets chemicals on their skin, immediately rinse with water. Consult the MSDS for more information about treating skin exposure.

⚠CAUTION **Chemical hazard:** If a processed part is sticky, even after full processing, something may have gone wrong with the processing steps or the part maybe partially processed. Do not handle the part with bare hands and avoid any inhalation of fumes by using an appropriate mask with filter.

⚠DANGER **Chemical Hazard:** Always keep the PostPro3D® machine closed when not processing to ensure no fumes are inhaled by operators. Keep waste containers closed all the time

⚠CAUTION **Pinch Hazard:** The lid of the processing chamber is heavy. Close the lid carefully using the handles on the PostPro3D® to avoid pinching fingers or hands.

⚠CAUTION **Electrical Hazard:** Do not open any door in the body of the device as there is an electric shock risk. The doors are for service entry only by AMT Support team only.

⚠WARNING **Chemical warning:** Do not place processed parts in the mouth or give processed parts to children or to animals.

⚠DANGER **Tipping Hazard:** Always use at least two people to move PostPro3D®. Unlock the castor heels at the base of the machine before attempting to move the machine. Lock the wheels once PostPro3D® is in its new position.

CONFIDENTIAL

2 // MACHINE OVERVIEW

2.1 // MACHINE DIMENSIONS

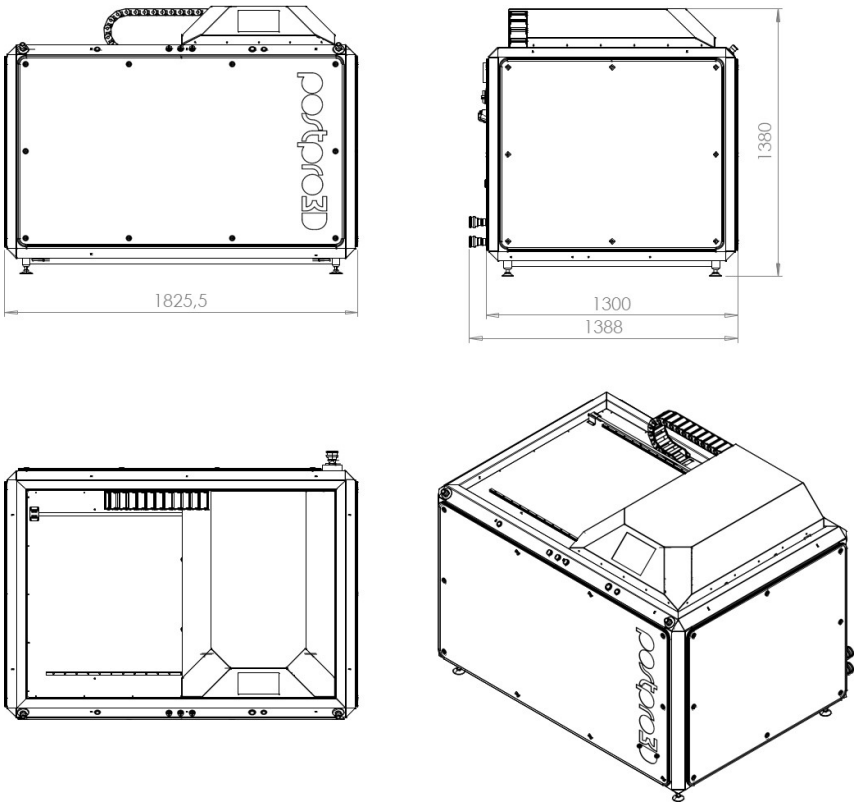

2.2 // POSTPRO3D® MACHINE DIMENSIONS AND WEIGHT

	UNPACKED (NET)	
Dimension	Imperial	Metric
Height	55 in.	1380 mm.
Length	72 in.	1825 mm.
Width	51 in.	1300 mm.
Weight	2420 lbs.	1100 kg.

2.3 // POSTPRO3D® CRATE DIMENSIONS

	POSTPRO3D	
Dimension	Imperial	Metric
Length	79 in.	2000 mm.
Width	59 in.	1500 mm.
Height	59 in.	1500 mm.
Weight	2750 lbs.	1250 kg.

CONFIDENTIAL

3 // POSTPRO3D PACKAGING

Ensure that the there is suitable space to safely package the PostPro3D®.
Two people are required to package the PostPro3D®.

3.1 // SHIPPING CRATE

The PostPro3D® machine crate will have the dimensions and weights as per Table 2.3.

3.2 // PACKING THE CRATE

- Client will need to provide equipment for loading the crate to the delivery vehicle, typically a forklift truck and driver.
- Client will need to provide equipment to aid the packing process, typically a forklift truck and driver.

3.3 // SAFETY MEASURES FOR PACKAGING

Packaging procedures must be performed by trained personnel in accordance with occupational health and safety measures enforced at the install country or state, which may include but not limited to:

- Clear of other traffic, pedestrians and people not involved in loading or unloading.
- Clear of overhead electric cables so there is no chance touching them, or of electricity jumping to 'earth' through machinery, loads or people.
- Safety equipment must be considered. Mechanical equipment and heavy moving loads are dangerous.
- Guards or skirting plates may be necessary if there is a risk of anything being caught in machinery (for example dock levellers or vehicle tail lifts). There may be other mechanical dangers and safety procedures to be considered.
- Ensure the vehicle or trailer has its brakes applied and all stabilisers are used. The vehicle should be as stable as possible.
- Always check the floor or deck of the loading area before loading to make sure it is safe. Look out for debris, broken boarding, etc.
- Loading should allow for safe unloading.

3.4 // PERSONAL PROTECTION EQUIPMENT (PPE)

The following PPE should be worn when unboxing the crate:

- Safety shoes with protected toes
- Safety glasses
- Safety gloves

⚠ **Ensure the PPE being worn is compliant with company, local and national safety regulations.**

CONFIDENTIAL

3.5 // TOOLS REQUIRED FOR PACKAGING

The following tools are necessary for unboxing the PostPro3D®.

- Drill
- Pozidrive Screwdriver Drill Bit
- Panel Key
- Cutters
- Cable ties
- Packaging Wrap
- Ratchet Straps/Packaging Strapping
- Forklift
- Paper Towel
- Isopropyl Alcohol

3.6 // PACKAGING PROCEDURE

Please follow the below procedure for unboxing the PostPro3D®;

1. Empty the processing chamber ensuring the processing racks have been removed.

2. Remove the solvent from the machine

   a. Remove the left hand panel of the PostPro3D
   b. Disconnect the solvent siphon hose, breather hose and low level connectors form the Virgin canister and remove it from the machine. Ensure the recovery canister is still in the machine.
   c. Create a recipe on the machine which will dose 200ml of solvent and a drying cycle of at least 30 minutes.
   d. Run the newly created recipe
   e. During the cycle the machine should display a SE11: Consumable Injection Timeout error. This indicates that all the solvent has been emptied from the solvent feed lines.
   f. Take care when opening the lid as there may be residual solvent in the chamber.

3. Clean the inside of the chamber using Isopropyl Alcohol and tissue paper.

4. Shut down the PostPro3D, Chiller and Extractor.

5. Use a cable tie to fix the machine access key to the energy chain.



CONFIDENTIAL

6. Disconnect the PostPro3D from the power supply.

7. Place paper towel under the coolant hoses on the PostPro3D, to catch any Glycol spillages.

8. Remove the coolant hoses from the PostPro3D

9. Remove the extraction hose from the machine.

10. Remove the right hand panel of the PostPro3D.

11. Feed the electrical power cable through the extraction spigot on the PostPro3D.



12. Wind the cable and use a cable tie to secure the cable in place.



13. Replace the right hand panel of the PostPro3D

14. Remove the Recovery canister from the PostPro3D

15. Use a cable tie to secure all loose solvent hoses and connections.

16. Replace the left hand panel of the machine.

17. Wrap the machine in packaging film.

CONFIDENTIAL

18. Use a forklift to lift the machine, once suspended screw in the feet.



19. Load the machine on to the base of the crate

20. Strap the machine to the crate using ratchet straps or packaging strapping.

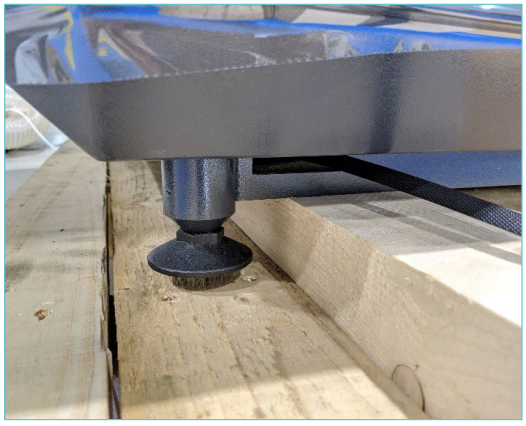





21. Assemble the walls and lid of the crate.

22. Fix shipping labels to the crate.



CONFIDENTIAL

ADDITIVE MANUFACTURING TECHNOLOGIES

postpro3D™

4 // CONTACT INFORMATION

For further information please contact AMT:

support@amtechnologies.com

EU: +44 114 3122 3344

US: +1 512 352 9393



CONFIDENTIAL