ADDITIVE MANUFACTURING TECHNOLOGIES

postpro3D™



INSTALLATION GUIDE

April 2020 / V1.1

CONFIDENTIAL

ADDITIVE MANUFACTURING TECHNOLOGIES

postpro3D™

CONTENTS

1	**RISKS AND SAFETY WARNINGS**	**4**
2	**MACHINE OVERVIEW**	**5**
	2.1 MACHINE DIMENSIONS	5
	2.2 POSTPRO3D® MACHINE DIMENSIONS AND WEIGHT	5
3	**INSTALLATION PRE-REQUISITES**	**6**
	3.1 TOOLS REQUIRED FOR INSTALLATION	6
	3.2 SAFETY MEASURES FOR INSTALLATION	6
4	**INSTALLATION PROCEDURE**	**7**
	4.1 BOFA EXTRACTION UNIT INSTALLATION	7
	4.2 LAUDA CHILLER UNIT INSTALLATION	9
	4.3 POSTPRO3D INSTALLATION	10
5	**CONTACT INFORMATION**	**11**

CONFIDENTIAL

ADDITIVE MANUFACTURING TECHNOLOGIES

postpro3D™

DOCUMENT IS CONFIDENTIAL

Data supplied in this document shall not be duplicated, used or disclosed in whole, or in part, for any purpose other than evaluation. The contents will not be passed in any form verbal, paper or electronic to any other company or individual without the express permission of Additive Manufacturing Technologies Limited.

1 // RISKS AND SAFETY WARNINGS

⚠DANGER Danger indicates an imminently hazardous situation, which, if not avoided, will result in death or serious injury.

⚠WARNING Warning indicates a potentially hazardous situation, which, if not avoided, could result in death or serious injury.

⚠CAUTION Caution indicates a potentially hazardous situation, which, if not avoided, may result in minor or moderate injury.

⚠DANGER **Chemical Hazard: BlastX** may cause severe skin burns and permanent eye damage, including blindness. The chemical may also cause organ damage with prolonged exposure. Pregnant and breastfeeding women should not enter the processing room or operate PostPro3D®. The client must have an eye wash station and emergency shower available when using this consumable and follow the general lab safety precautions. The consumables may also cause an allergic skin reaction. Do not breathe the mist or vapour.

⚠CAUTION **Chemical Hazard:** Avoid touching parts that have been partially or recently processed, even when wearing nitrile gloves. Ensure that all PostPro3D® process steps are concluded to the manufacturer's instructions before touching any processed parts with bare hands.

⚠CAUTION **Chemical Hazard:** If an operator gets chemicals in their eye, immediately flush it out with water using the safety eye wash. Consult the MSDS for more information about treating eye exposure.

⚠CAUTION **Chemical Hazard:** If an operator gets chemicals on their skin, immediately rinse with water. Consult the MSDS for more information about treating skin exposure.

⚠CAUTION **Chemical hazard:** If a processed part is sticky, even after full processing, something may have gone wrong with the processing steps or the part maybe partially processed. Do not handle the part with bare hands and avoid any inhalation of fumes by using an appropriate mask with filter.

⚠DANGER **Chemical Hazard:** Always keep the PostPro3D® machine closed when not processing to ensure no fumes are inhaled by operators. Keep waste containers closed all the time

⚠CAUTION **Pinch Hazard:** The lid of the processing chamber is heavy. Close the lid carefully using the handles on the PostPro3D® to avoid pinching fingers or hands.

⚠CAUTION **Electrical Hazard:** Do not open any door in the body of the device as there is an electric shock risk. The doors are for service entry only by AMT Support team only.

⚠WARNING **Chemical warning:** Do not place processed parts in the mouth or give processed parts to children or to animals.

⚠DANGER **Tipping Hazard:** Always use at least two people to move PostPro3D®. Unlock the castor heels at the base of the machine before attempting to move the machine. Lock the wheels once PostPro3D® is in its new position.

CONFIDENTIAL

2 // MACHINE OVERVIEW

2.1 // MACHINE DIMENSIONS

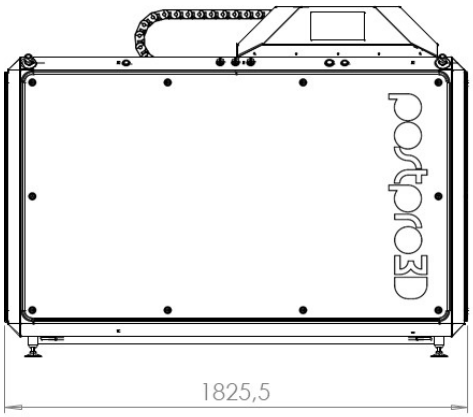

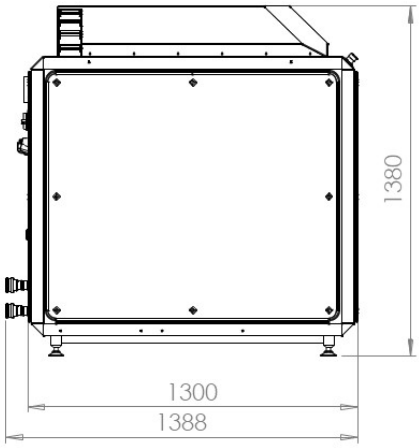

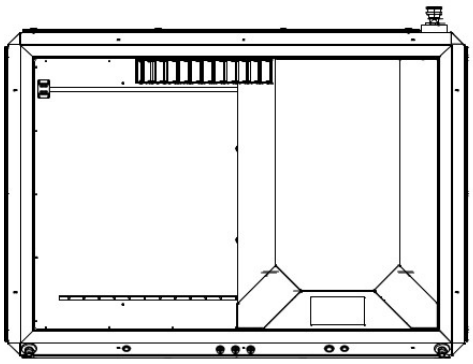

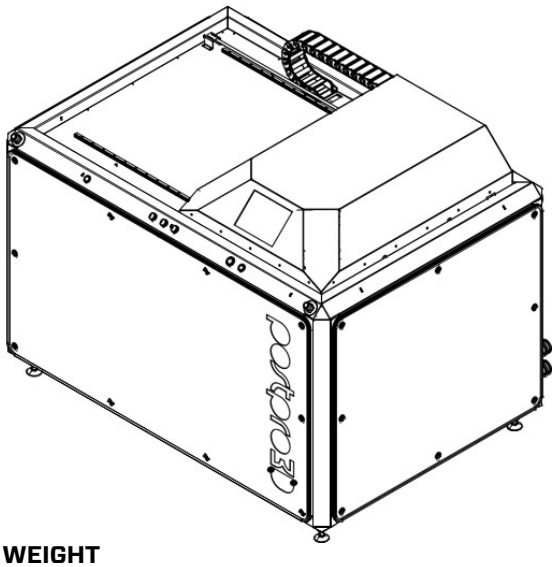

2.2 // POSTPRO3D® MACHINE DIMENSIONS AND WEIGHT

	UNPACKED (NET)	
Dimension	Imperial	Metric
Height	55 in.	1380 mm.
Length	72 in.	1825 mm.
Width	51 in.	1300 mm.
Weight	2420 lbs.	1100 kg.

CONFIDENTIAL

3 // INSTALLATION PRE-REQUISITES

The PostPro3D and accessories will be shipped to the customer prior to the installation taking place. It is the responsibility of the customer to unbox and position the machines in the desired installation location.

It is the responsibility of the customer to connect the PostPro3D and ancillary equipment to the electrical power supply of the building and also the external extraction system.

The installation should not be planned until AMT have received confirmation that the machine connections have been made.

Watch the installation video on the AMT Academy for additional guidance.

3.1 // TOOLS REQUIRED FOR INSTALLATION

- [ ] Wire strippers
- [ ] Multimeter
- [ ] Ferrule Crimping Tool
- [ ] Ferrules
- [ ] Red + Black Electrical Tape
- [ ] Screwdriver Kit
- [ ] Allen Key Kit
- [ ] Torx Kit
- [ ] Pliers
- [ ] Large Adjustable Spanner (55mm)
- [ ] Combi Spanners (36mm + 41mm)
- [ ] Panel Keys (PostPro3D + Extractor)
- [ ] Safety Knife
- [ ] Plastic Mallet

3.2 // SAFETY MEASURES FOR INSTALLATION

Installation procedures must be performed by trained personnel in accordance with occupational health and safety measures enforced at the install country or state. The following PPE should be worn during installation of the PostPro3D.

- [ ] Gloves
- [ ] Safety Glasses
- [ ] Lab Coat
- [ ] Respirator
- [ ] Safety Shoes

CONFIDENTIAL

4 // INSTALLATION PROCEDURE

Ensure the work area is safe and a suitable risk assessment has been carried out prior to starting the installation.

4.1 // BOFA EXTRACTION UNIT INSTALLATION

1. When the extractor is in the correct position lock the front castors of the extractor

2. Open the front door of the extractor and remove the transit foam.



3. Turn the lever, located inside the front door, to the right hand side to lock the filter in place.

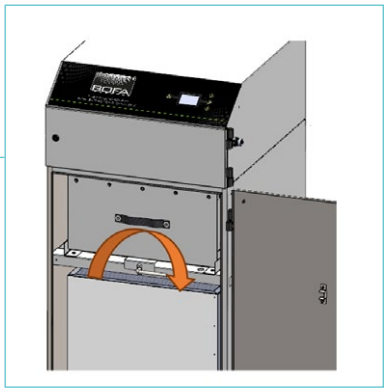

4. Inside the top panel ensure the '24V Stop Start Function' switch is in the 'ON' position.

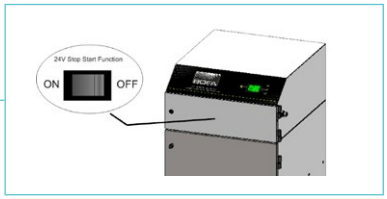

CONFIDENTIAL

5. The extractor should be supplied with a connector in place. If this is not the case the plug connector will be shipped with the PostPro3D and will be attached to the trailing cable on the lid. Use ferrules to wire the connector suing the configuration below:

Pin 1: White

Pin 2: Green

Pin 3: Black

Pin 4: Red



6. The start connection cable can be connected to the PostPro3D.

7. Connect the extraction hose between the PostPro3D and the extractor

8. Connect the extraction outlet of the extractor to the building extraction system.

9. Turn the extractor on using the switch located on the rear of the unit. Then press the 'Stand By' button located on the front panel.

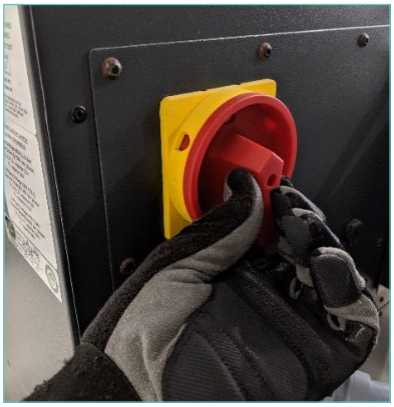



10. Set the airflow.

    a. Press and hold the 'Enter' button for 3 seconds until all the button lights flash green.

    b. Use the '+' and '-' to set the desired airflow. 550 cfm is recommended.

    c. Once the desired temperature has been set, leave the controls for 10 seconds to store the value.

11. The extractor is now ready to use. It can be switched off until the rest of the installation has been completed.

CONFIDENTIAL

4.2 // LAUDA CHILLER UNIT INSTALLATION

ONLY USE THE GLYCOL SUPPLIED WITH THE MACHINE. ONLY USE ETHELYNE GLYCOL MIXED AT A CONCENTRATION OF 30%

1. Connect the hose fittings to the rear of the chiller
2. Connect the coolant hoses between the chiller and the PostPro3D.
    a. Connect the Outlet of the chiller to the Inlet of the PostPro3D.
    b. Connect the Inlet of the chiller to the Outlet of the PostPro3D.
3. Open the valves inside the chiller





4. Fill the chiller with water/Glycol mix. Power on the unit and continue to fill with water/Glycol until the coolant level remains stable. It may be necessary to power cycle the chiller to ensure the coolant is being pumped through the system. Ensure the level is between the ”min” and “max” indicators on the chiller.
5. Set the Antifreeze temperature:
    a. Press and hold Prg and Sel until the display reads “00”.
    b. Press up until the display reads “66”.
    c. Press Sel until you get a “zigzag” symbol.
    d. Press down until you get “-A-”.
    e. Press Sel so the display reads “A01”.
    f. Press Sel again so the antifreeze value is displayed.
    g. Change to the desired value with up and down (recommended -5°C).
    h. Press Sel to save, and then press Prg until the display is back to how it was at the start

CONFIDENTIAL

6. Set the temperature setpoint

   a. Press and hold Prg and Sel until the display reads “00”.
   b. Press up until the display reads “66”.
   c. Press Sel until you get a “zigzag” symbol.
   d. Press down until you get “-r-”.
   e. Press Sel so the display reads “r01”.
   f. Press Sel again so the setpoint value is displayed.
   g. Change to the desired value with up and down (recommended 0°C).
   h. Press Sel to save, and then press Prg until the display is back to how it was at the start

4.3 // POSTPRO3D INSTALLATION

1. Remove the left hand panel of the machine

2. Insert the BlastX canister into the machine

3. Connect the siphon and breather connections between the PostPro3D and canister

4. Connect the low level sensor on the canister

5. Replace the left hand panel

6. Ensure the extractor and chiller are powered on and connected

7. Power on the PostPro3D

   At this point the machine may show the following errors:

   IE43: Consumable Flow Meter Air Bubble Detection (FM1)
   IE22: Lid Slide Incorrect Position (SD1)

   Do not be alarmed, these are common errors which are to be expected. These errors should be eradicated once the installation has been completed.

8. Press the 'Start Processing' button to run the start up check and follow the onscreen instructions. The start up check will last for a duration of approximately 15 - 20 minutes.

9. Once the start up check is complete, create a recipe and run a process cycle to 'wet' the solvent flow lines.

CONFIDENTIAL

ADDITIVE MANUFACTURING TECHNOLOGIES

postpro3D™

5 // CONTACT INFORMATION

For further information please contact AMT:

support@amtechnologies.com

EU: +44 114 3122 3344

US: +1 512 352 9393



CONFIDENTIAL