ADDITIVE MANUFACTURING TECHNOLOGIES

postpro3D™



POSTPRO3D CARBON FILTER REPLACEMENT

June 2020 / V1.0

ADDITIVE MANUFACTURING TECHNOLOGIES

postpro3D™

Wear appropriate PPE when conducting the carbon filter replacement, this includes solvent resistant safety gloves, safety boots and a respirator.

Make sure the left side of the PostPro3D is free of obstacles.

1

Power off the PostPro3D, chiller and extractor.

2

Use the supplied panel key to unlock and remove the left hand panel of the machine.

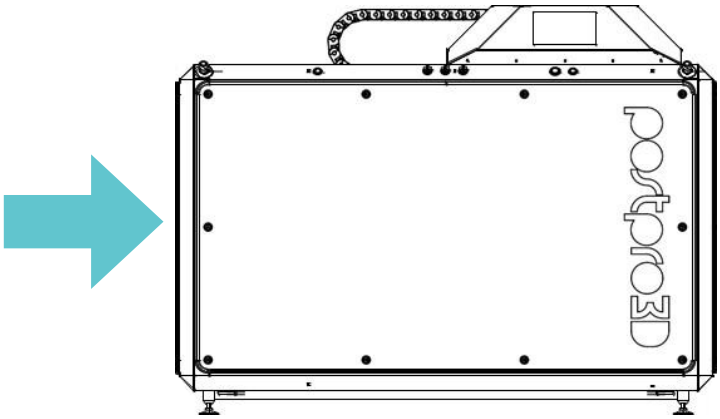

3

Disconnect the BLASTX hoses and low level sensor from both the recovery and the virgin canisters.



4

Remove the two hand screws securing the canisters to the base of the PostPro3D.



5

Remove the two canisters form the machine.

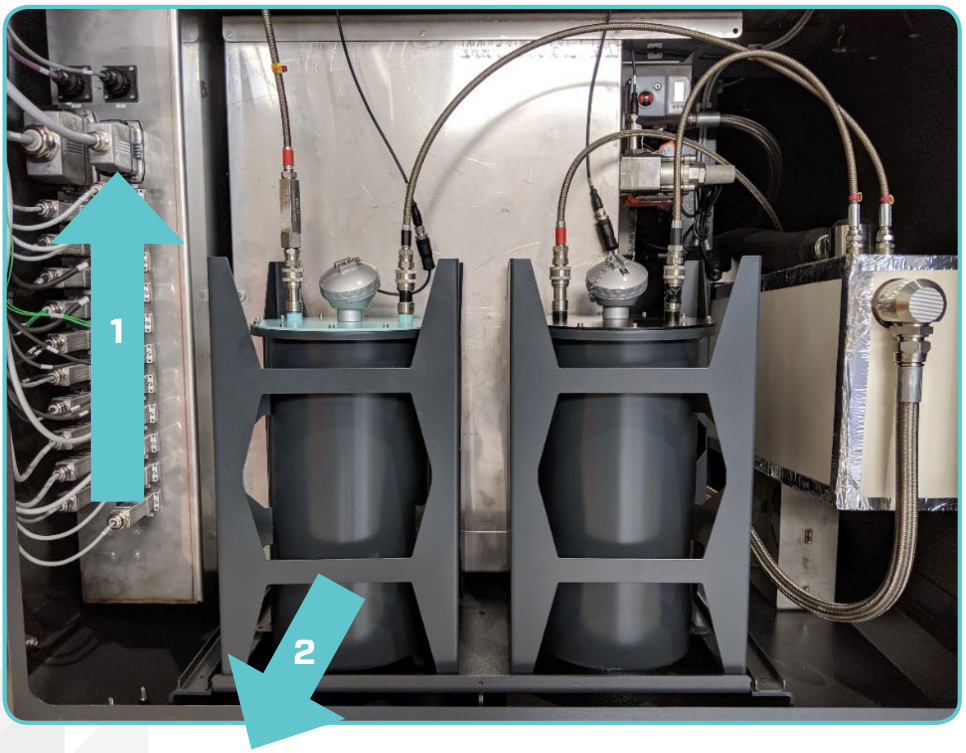

6

Disconnect the hoses, valves and sensors located on the right hand side of the carbon filter.



7

Unscrew the three carbon filter locks, two are located under the rail and one is located at the top of the filter.

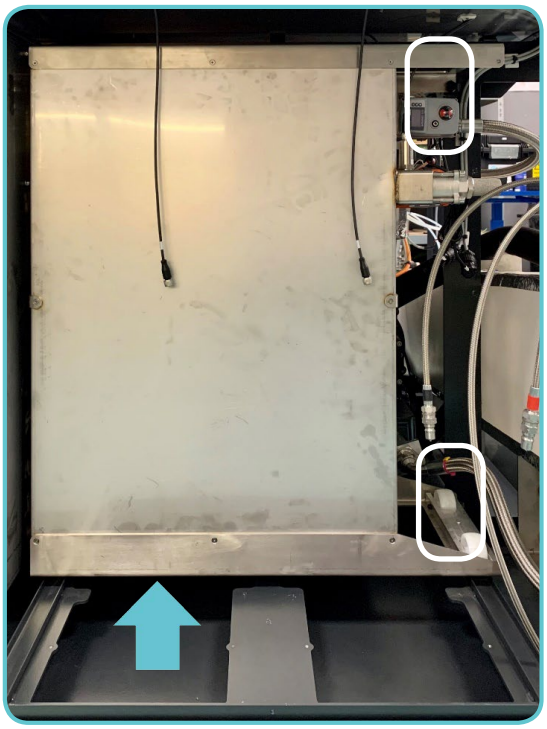

8

Remove the carbon filter by rolling it towards you, then lift out of the machine.

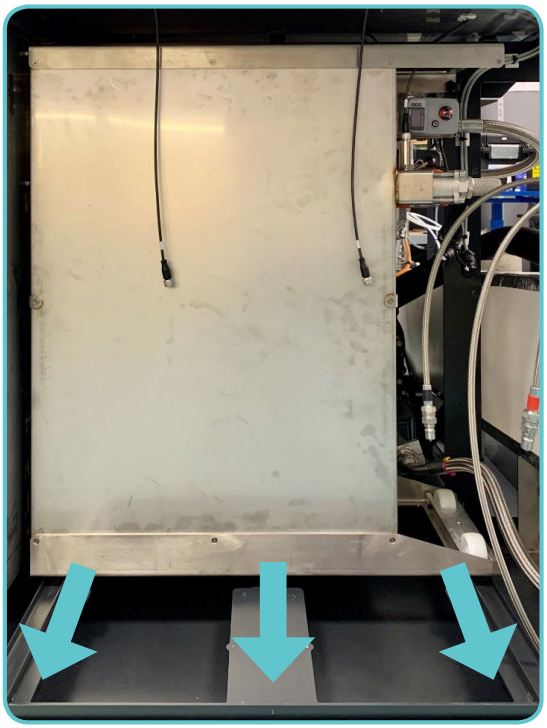

9

Check the new carbon filter has all the correct fixtures and fittings in place. It may be necessary to remove fittings from the old filter and fit onto the new filter.

10

Insert the new carbon filter, screw in the locks (2 under the rail, 1 on the top of the filter), connect the hose to the filter, connect W.PR4 to PR4, connect W.PR5 to PR5, connect W.BV6 to BV6 and connect W.BV7 to BV7.

11

Insert the canisters (virgin to the left, recovery to the right), screw in the locks, connect the BLASTX hoses to the quick release fittings on the top of the canisters respecting the colours (black to black, red to red), connect the low level sensors, W.LS1 to LS1, connect W.LS2 to LS2.

12

Replace the side panel. Contact AMT Support to reset the carbon filter counter.

13

Seal the fittings on the old carbon filter and place the carbon filter in a sealed bag. Place the filter on a pallet and contact AMT support to arrange the shipment of the filter.



ADDITIVE MANUFACTURING TECHNOLOGIES

postpro3D™

For further information please contact Additive Manufacturing Technologies:

support@amtechnologies.com

EU: +44 114 3122 3344

US: +1 512 352 9393

